SAMPLE ROAD
(STATE ROAD NO. 834)

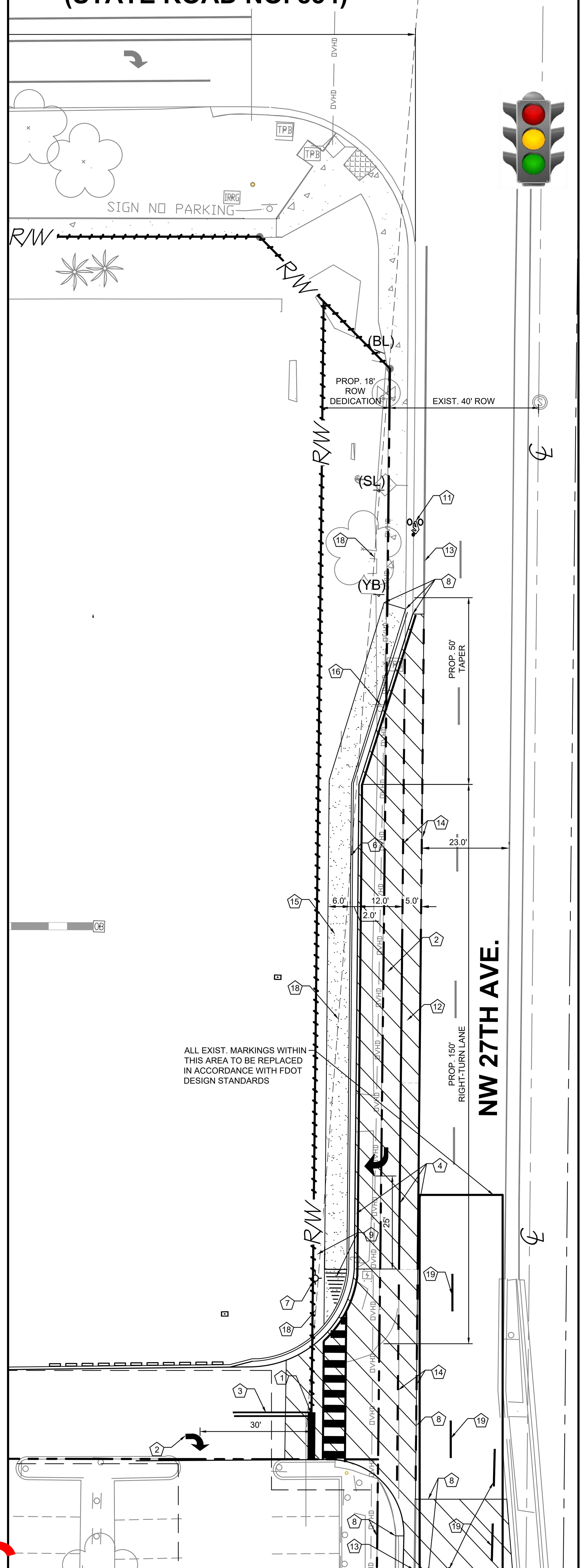

PAVING AND STRIPING BLOW UP

SCALE: 1" = 20'

KEYNOTE LEGEND

1. PROP. STOP-BAR PER FDOT INDEX 711-001
2. PROP. WHITE DIRECTIONAL ARROWS PER FDOT INDEX 711-002
3. PROP. 25'-6" DOUBLE YELLOWS PER FDOT INDEX 711-001
4. PROP. 6" WHITE STRIPING PER FDOT INDEX 711-001
5. CROSSWALK STRIPING PER FDOT INDEX 711-001, 10 of 14
6. PROP. TYPE "F" CURB AND GUTTER IN ACCORDANCE WITH FDOT DESIGN STANDARDS 2020, AND FDOT INDEX 520-001
7. PROP. RELOCATED LIGHT POLE
8. MATCH EXISTING LINE AND GRADE
9. PROP. HANDICAP RAMP TYPE CR-G, PER FDOT 2020 INDEX 522-002, 4 OF 8
10. PROP. DETECTABLE WARNING PER FDOT INDEX 522-002, 6 OF 8, B
11. PROP. BICYCLE MARKING PER FDOT INDEX 711-002
12. PROP. 5' WIDE BICYCLE LANE
13. EXIST. 6" WHITE STRIPING
14. PROP. 6" WHITE 2'-4' SKIPS PER FDOT INDEX 711-001
15. PROP. 6" THICK CONCRETE SIDEWALK
16. EXIST. 40 MPH SPEED LIMIT SIGN (TO BE RELOCATED)
17. EXIST. STOP SIGN (TO BE RELOCATED)
18. SAFE SIGHT TRIANGLE TRIANGLE PER FDOT DESIGN MANUAL 2020 CHAPTER 212.11, EXHIBIT 212-6
19. EXIST. MARKINGS TO BE REPLACED IN ACCORDANCE WITH FDOT DESIGN STANDARDS

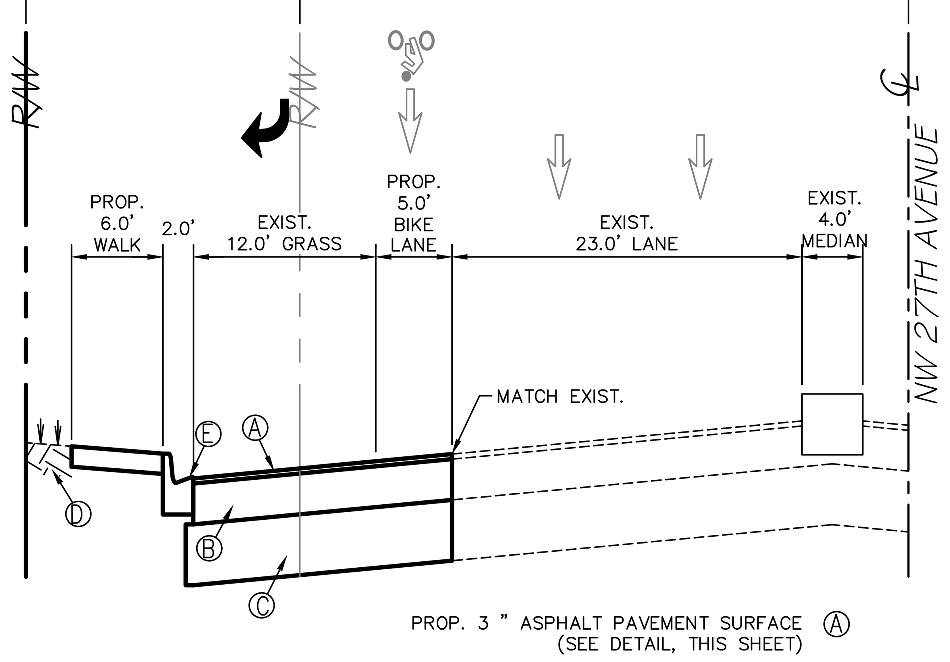

PROP. 3 " ASPHALT PAVEMENT SURFACE (SEE DETAIL, THIS SHEET) Ⓐ
PROP. 12" BASE COURSE (SEE DETAIL, THIS SHEET) Ⓑ
PROP. 12" STABILIZED SUBGRADE (SEE DETAIL, THIS SHEET) Ⓒ
EXIST. SOLID SOD Ⓓ
PROP. TYPE "F" CURB & GUTTER Ⓔ

CONTRACTOR SHALL VERIFY PAVEMENT SPECIFICATION WITH BROWARD COUNTY INSPECTOR PRIOR TO CONSTRUCTION

NW 27TH AVENUE
PROPOSED TURN LANE CROSS SECTION "A"-"A"

SCALE: HOR. 1" =10'
VERT. 1' = 4'

BROWARD COUNTY PUBLIC WORKS DEPARTMENT	WATER & WASTEWATER SERVICES ENGINEERING DIVISION 2555 WEST COPANS ROAD POMPANO BEACH, FL 33069 PHONE NO. 954-831-0745 FAX: 954-831-0925	STANDARD DETAIL

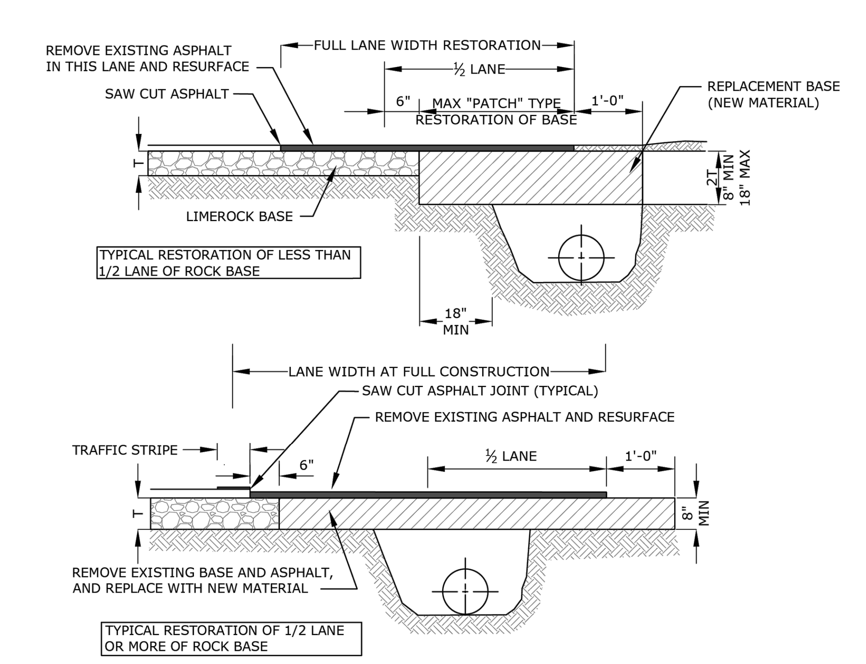

1. BASE MATERIAL SHALL HAVE A MINIMUM LBR OF 100 AND A MINIMUM CARBONATE CONTENT OF 70% (60% FOR LOCAL STREETS).
2. BASE SHALL BE PLACED IN 6" MAXIMUM THICKNESS LAYERS WITH EACH LAYER COMPACTED AS REQUIRED AND TESTED PRIOR TO THE PLACEMENT OF THE SUCCEEDING LAYERS.
3. SUBGRADE MATERIAL SHALL BE GRANULAR AND ANGULAR AND SHALL HAVE A MINIMUM LBR OF 40.
4. BACKFILL SHALL BE PLACED AND COMPACTED IN 6" LAYERS, BUT TESTING WILL BEGIN 12" ABOVE THE INSTALLED FACILITY.
5. ALL EDGES OF EXISTING ASPHALT PAVEMENT THAT ABUT RESURFACING SHALL BE SAW CUT IN STRAIGHT LINES PARALLEL TO OR PERPENDICULAR TO THE ROADWAY, PRIOR TO RESURFACING.
6. RESURFACING MATERIAL SHALL BE CONSISTENT WITH SURROUNDING SURFACE, AND SHALL BE APPLIED IN 2 LIFTS, A MINIMUM OF ¾ INCH AND A MAXIMUM OF 2" IN THICKNESS.
7. TRAFFIC STRIPES SHALL NOT BE PLACED DIRECTLY ON TOP OF THE JOINT.
8. FOR STATE ROADS REFER TO FDOT SPECIFICATIONS AND REQUIREMENTS.

REPLACES FORMER DWG NO.19A	RESTORATION OF ROADWAY CUT FOR PARALLEL UTILITY INSTALLATION	FIGURE 182
REVISED 2/23/2011		

L:\EED_DESIGN_DATA\STANDARDS\WWS STANDARD DETAILS.dwg, 182, 3/22/2012 12:20:40 PM, CBGARCIA

STRUCTURE TABLE

STRUCTURE NUMBER	STRUCTURE TYPE	RIM ELEVATION	INVERT ELEVATION
EX-1	EXISTING CATCH BASIN.	12.00	(15") 3.59 (W)
S-21	PROP. 48" DRAINAGE MANHOLE PER FDOT STND PLANS. CONTRACTOR TO CORE DRILL AND CONNECT PROP. 18" HDPE STORM PIPE	11.00 M.E.	(15") 3.59 (E) (18") 3.59 (NW)
S-22	PROP. 48" CATCH BASIN AND TYPE "C" FRAME, AND GRATE PER FDOT STND PLANS 425-052WITH TYPE II SKIMMER PER FDOT STND PLAN INDEXES 232 & 241	11.30	(18") 3.59 (SE) (18") 3.59 (N)
S-23	PROP. 48" CATCH BASIN AND TYPE "C" FRAME, AND GRATE PER FDOT STND PLANS 425-052WITH TYPE II SKIMMER PER FDOT STND PLAN INDEXES 232 & 241	12.30	(18") 3.59 (S)

SITE SYMBOLS /LEGEND

- (S) STOP SIGN, R1-1, 36"X36"
- (RO) RIGHT TURN ONLY, R3-5R, 30" X 36"
- (YB) YIELD TO BIKES, R4-4, 36" X 30"
- (SL) SPEED LIMIT 40 R2-4, 18" X 24"
- (BL) BIKE LANE R3-17
- PROPOSED SOLID DIRECTIONAL ARROW
- (E.P.) EDGE OF PVMT. ELEV. OR GROUND ELEV.
- PROP. FLOW DIRECTION
- +14.40' EXIST. GRADE ELEVATION

HATCH LEGEND

- PROPOSED CONCRETE SIDEWALK
- PROPOSED NEW PAVEMENT. CONTRACTOR SHALL MATCH EXISTING PAVEMENT PER FDOT STANDARDS SPECIFICATIONS

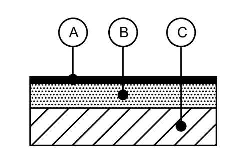

Ⓐ 3" OPTIONAL BASE GROUP 9 (OBG9), ASPHALT SHALL BE PLACED IN TWO (2) LIFTS: 2" OF SP-12.5 AND 1" OF SP-9.5.

Ⓑ 12" CRUSHED LIMEROCK BASE COURSE HAVING A MINIMUM LBR OF 100 AND MINIMUM CARBON CALCIUM CONTENT 70%

COMPACTED TO AT LEAST 98% OF THE MODIFIED PROCTOR MAXIMUM DRY DENSITY PER ASTM D-1557, PLACED IN (2) LIFTS, PER MG, PW.

Ⓒ TYPE B OR C, 12" STABILIZED SUB-BASE FILLED WITH MINIMUM LBR OF 40 COMPACTED TO AT LEAST 98% OF THE MODIFIED PROCTOR MAXIMUM DRY DENSITY PER ASTM D-1557.

FDOT PAVEMENT DETAIL

SCALE: N.T.S.

PAVEMENT NOTE:

ANY PAVEMENT MARKINGS DAMAGED DUE TO CONSTRUCTION WILL BE REPLACED AT CONTRACTOR'S EXPENSE.

ELEVATIONS NOTE:

ELEVATIONS ARE RELATIVE TO THE NORTH AMERICAN VERTICAL DATUM OF 1988 (NAVD88) AND ARE BASED ON THE BROWARD COUNTY BENCHMARK #260/2752C.

REFER TO BOUNDARY AND TOPOGRAPHIC SURVEY CONDUCTED BY MILLER LEGG.

ADA NOTE:

CONSULTANT HAS IDENTIFIED AND USED THE CURRENT VERSION OF ALL LOCAL, STATE, AND FEDERAL ACCESSIBILITY GUIDELINES FOR SITE ACCESSIBILITY THE SITE HAS BEEN DESIGNED IN ACCORDANCE WITH, BUT NOT LIMITED TO, CITY, COUNTY, AND STATE ACCESSIBILITY CODES, AND THE 2010 AMERICANS WITH DISABILITIES ACT STANDARDS FOR ACCESSIBLE DESIGN (2010 ADA STANDARDS), AS AMENDED.

B.C.H.C.E.D. REF. NO. 200617002

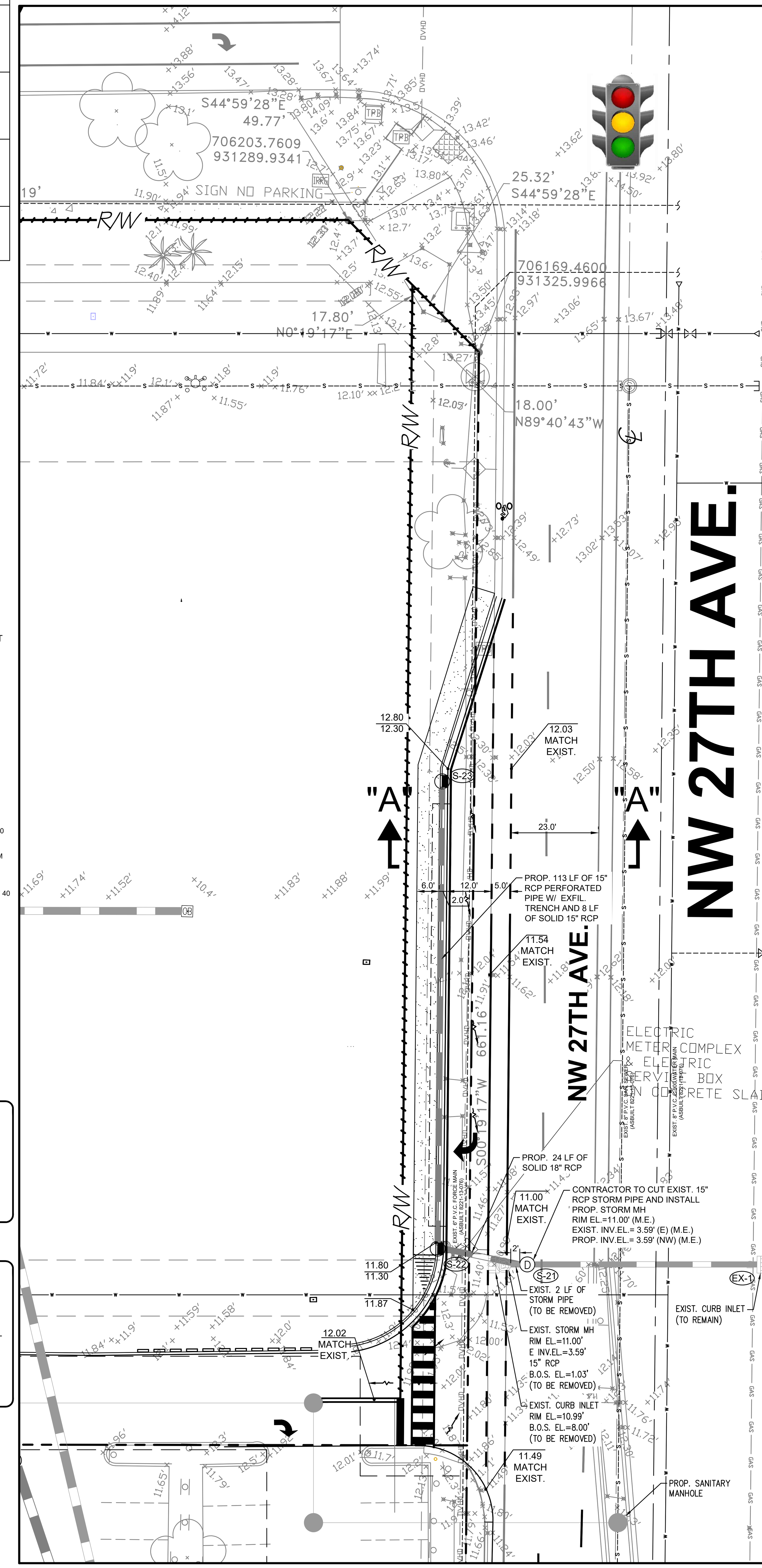

GRADING AND DRAINAGE BLOW UP

SCALE: 1" = 20'

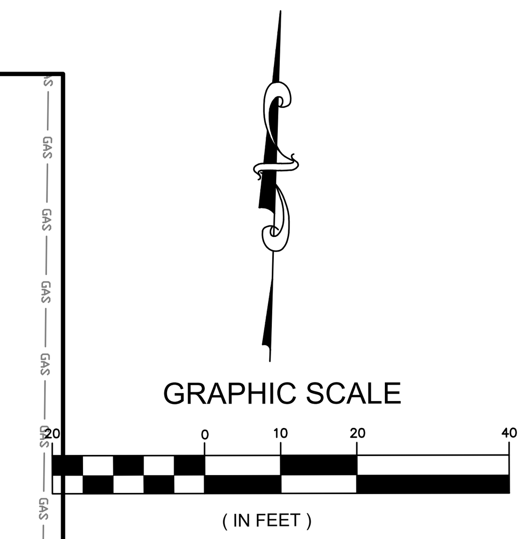

NW 27TH AVE.

BROWARD COUNTY NOTES:

THE FOLLOWING ITEMS ARE NOT REVIEWED OR ACCEPTED BY BROWARD COUNTY:

1. BROWARD COUNTY TRAFFIC ENGINEERING DIVISION'S REVIEW DOES NOT INCLUDE A REVIEW AND ACCEPTANCE OF THE PROJECT'S DESIGN OR OPERATION. THESE ITEMS ARE TO BE REVIEWED AND APPROVED BY THE CITY ENGINEER.

2. BROWARD COUNTY TRAFFIC ENGINEERING DIVISION DOES NOT REVIEW AND APPROVE, OR INSPECT AND ACCEPT THE FOLLOWING ITEMS FOR MAINTENANCE: PAVEMENT MARKINGS ON OR ADJACENT TO PAVER BRICKS, PAINTED ASPHALT, STAMPED ASPHALT OR PAVEMENT MARKINGS MADE OF PAVER BRICKS, RAISED INTERSECTIONS AND RELATED MARKINGS AND SIGNING, UN-WARRANTED MID-BLOCK CROSSWALKS AND RELATED MARKINGS AND SIGNING, UN-WARRANTED CROSSWALKS AND RELATED MARKINGS AND SIGNING, PAINTED/DECORATIVE CROSSWALKS, RAISED CROSSWALKS AND RELATED MARKINGS AND SIGNING, ADVANCED WARNING PAVEMENT MARKINGS FOR SPEED TABLES, BLINKER SIGNS, RECTANGULAR RAPID FLASHER BEACONS AND RELATED MARKINGS AND SIGNING, ON-STREET PARKING AND RELATED MARKINGS AND SIGNING, IN-ROAD LIGHTING AND RELATED MARKINGS AND SIGNING, GREEN BIKE LANES, FLEXIBLE DELINEATORS, DECORATIVE SIGNS AND DECORATIVE SIGN POSTS, PLANTERS, ON-SITE PAVEMENT MARKINGS AND SIGNING, OFF-SITE PAVEMENT MARKINGS AND SIGNING IN RIGHT-OF-WAY THAT IS NOT DEDICATED FOR PUBLIC USE, SIDEWALK WORK OR ASPHALT WORK.

3. THE CITY ENGINEER IS RESPONSIBLE FOR THE REVIEW AND APPROVAL OF THE DESIGN AND OPERATION OF THE PROJECT, AND FOR THE INSPECTION AND ACCEPTANCE OF THE FOLLOWING ITEMS THAT WILL BE MAINTAINED BY THE CITY: PAVEMENT MARKINGS ON OR ADJACENT TO PAVER BRICKS, PAINTED ASPHALT, STAMPED ASPHALT OR PAVEMENT MARKINGS MADE OF PAVER BRICKS, PAVEMENT MARKINGS ON OR ADJACENT TO PAINTED ASPHALT, RAISED INTERSECTIONS AND RELATED MARKINGS AND SIGNING, UN-WARRANTED MID-BLOCK CROSSWALKS AND RELATED MARKINGS AND SIGNING, UN-WARRANTED CROSSWALKS AND RELATED MARKINGS AND SIGNING, PAINTED/DECORATIVE CROSSWALKS, RAISED CROSSWALKS AND RELATED MARKINGS AND SIGNING, ADVANCED WARNING PAVEMENT MARKINGS FOR SPEED TABLES, BLINKER SIGNS, RECTANGULAR RAPID FLASHER BEACONS AND RELATED MARKINGS AND SIGNING, ON-STREET PARKING AND RELATED MARKINGS AND SIGNING, IN-ROAD LIGHTING AND RELATED MARKINGS AND SIGNING, GREEN BIKE LANES, FLEXIBLE DELINEATORS, DECORATIVE SIGNS AND DECORATIVE SIGN POSTS, PLANTERS, ON-SITE PAVEMENT MARKINGS AND SIGNING, OFF-SITE PAVEMENT MARKINGS AND SIGNING IN RIGHT-OF-WAY THAT IS NOT DEDICATED FOR PUBLIC USE, SIDEWALK WORK AND ASPHALT WORK.

4. ALL TRAFFIC CONTROL DEVICES MAINTAINED BY BROWARD COUNTY, THAT ARE REMOVED OR DAMAGED BY CONSTRUCTION, SHALL BE REPLACED BY CONTRACTOR USING CURRENT BROWARD COUNTY TRAFFIC ENGINEERING DIVISION STANDARDS.

Sunshine 811

Call 811 or visit sunshine811.com two full business days before digging to have buried facilities located and marked.

Check positive response codes before you dig!

URBN DESIGN

666 N.E. 125th STREET, SUITE 247
NORTH MIAMI, FL 33161
Phone: 305.720.2079
C.O.A. 33221

CHRISTOPHER PATRICK COLLINS ★ LICENSE No. 73819 ★ STATE OF FLORIDA ★ PROFESSIONAL ENGINEER

CHRISTOPHER COLLINS, P.E. REG-# 73819

8/26/2025

This item has been digitally signed and sealed by Christopher P. Collins, P.E. on the date adjacent to the seal.

Printed copies of this document are not considered signed and sealed and the signature must be verified on any electronics copies.

Christopher Collins — Digitally signed by Christopher Collins Date: 2025.08.26 13:06:18 -04'00'

Revision	Date
Revision 6 Comment	
Revision 5 Comment	
Revision 4 Comment	
Revision 3 Comment	
Revision 2 Comment	
Revision 1 Comment	

Designed by:	C.P.C.
Drawn by:	A.T.S.
Checked by:	C.P.C.
Approved by:	C.P.C.
Scale:	1" = 20'
Date:	05/25/2022
Job No.:	I002

© 2025

Plans for

FESTIVAL MARKETPLACE

2900 W SAMPLE ROAD
POMPANO BEACH,
FLORIDA

NW 27TH AVENUE TURNLANE BLOW UP PLAN

Sheet No.

C-7.4

C:\Users\smgco\My ShareSync\I002\Civil\DWG\C-7.4 NW 27TH AVENUE TUNLANE BLOWUP PLAN.dwg 8/26/2025 10:47pm

DRC

PZ22-12000027

10/01/2025